EQUIPMENT LAYOUT

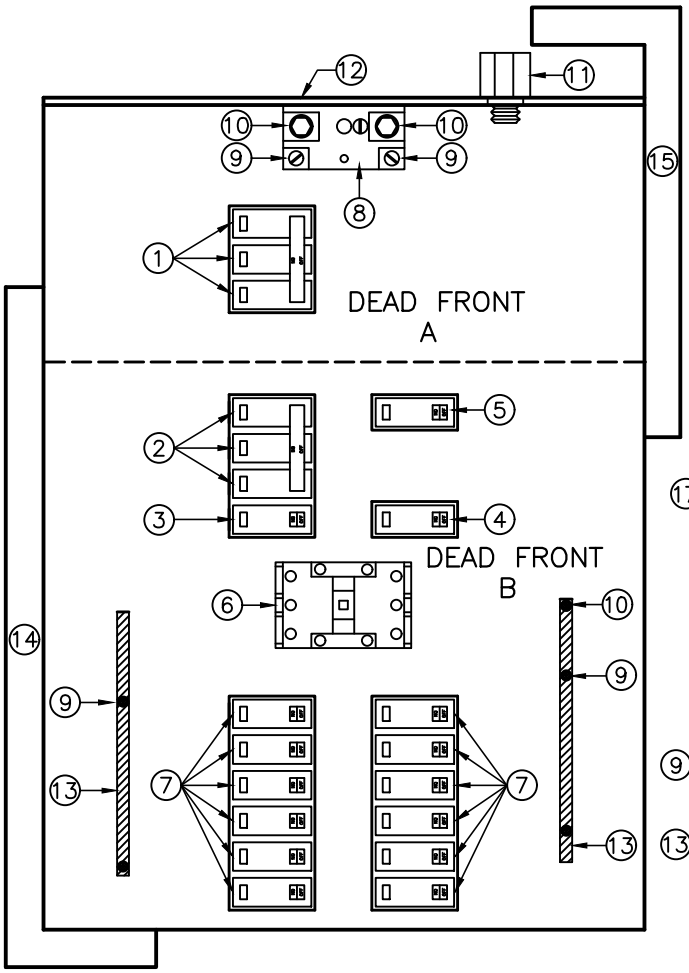

SCHEMATIC WIRING DIAGRAM

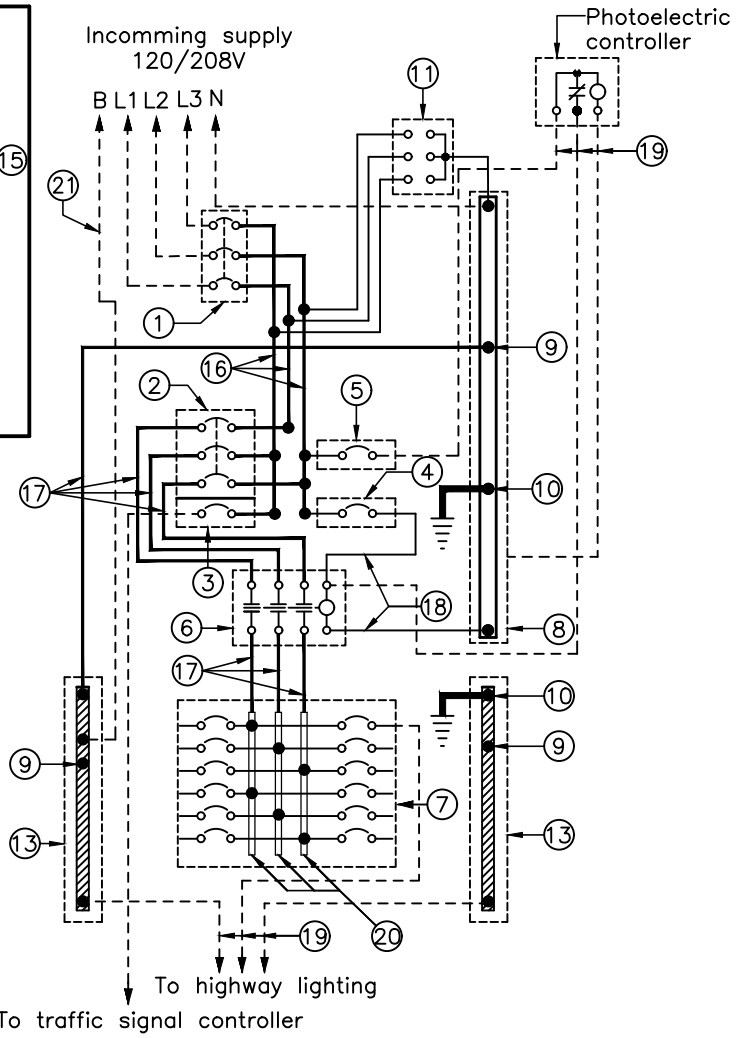

ELECTRICAL EQUIPMENT LIST

1. Main circuit breaker – 100A, 3–pole
2. Lighting circuit breaker – 60A, 3–pole
3. Traffic signal circuit breaker – 1–pole, ampacity as specified
4. Circuit breaker used for relamping – 15A, 1–pole
5. Circuit breaker for photoelectric controller – 15A, 1–pole
6. Lighting contactor – 60A, 3–pole, 120V coil
7. Branch circuit breakers – 30A, 1–pole, number of breakers as specified
8. Solid neutral assembly – 150A minimum, copper
9. Ground lug for No. 6 AWG stranded copper ground wire
10. Ground lug for No. 2/0 AWG stranded copper ground wire
11. Secondary lightning arrester, 650V, 3–pole
12. Drip sheild
13. Secondary neutral and ground bus according to CSA and as specified
14. Primary barrier
15. Secondary barrier
16. No. 3 AWG RWU90 wire or copper bus bar
17. No. 6 AWG RWU90 wire
18. No. 12 AWG RWU90 wire
19. Field wiring
20. Copper bus bar
21. Bonding (B) conductor required for metered services

NOTE:

A This MTOD shall be read in conjunction with OPSD 2440.030, 2440.050, and 2440.060.

MINISTRY OF TRANSPORTATION ONTARIO DRAWING	Sep 2025	Rev	3
SUPPLY CONTROL CABINET ASSEMBLY TYPE 2 120/208V, 100A, 3–PHASE, 4–WIRE	DRAFT		
	MTOD 2440.020		