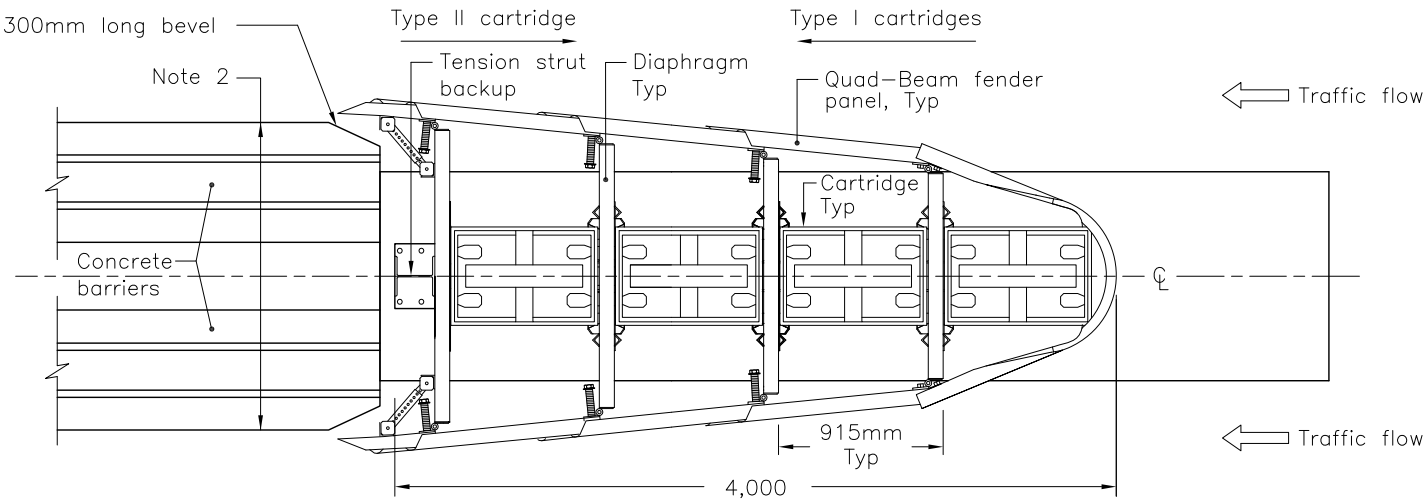

PLAN

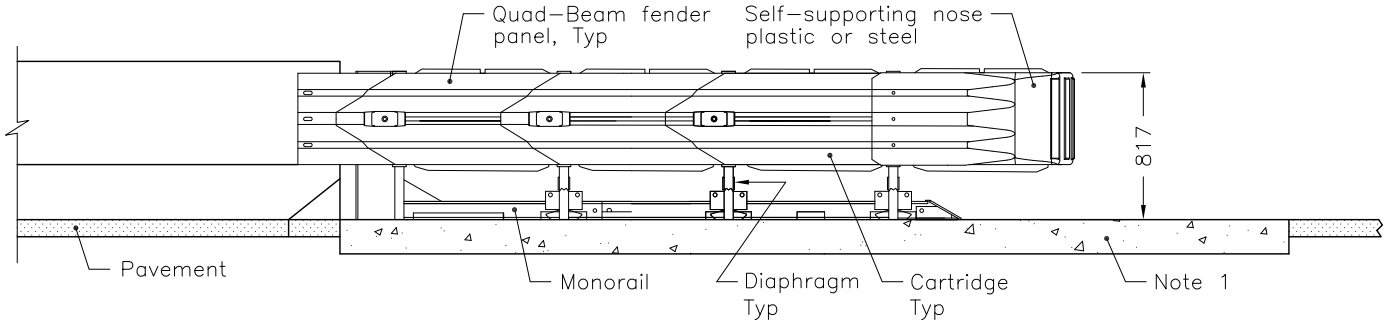

ELEVATION

NOTES:

1 The system shall be anchored to concrete pad detailed in OPSD 923.004.
2 Maximum width of object shall be 1658mm for the first 762mm behind the rear fender panels. Nominal system width 1,755 mm.

A Delineation shall be according to OPSD 984.204.
B The system depicted here is a proprietary product.
C System configuration meets NCHRP Report 350 Test Level 2.
D All dimensions are in millimetres unless otherwise shown.

MINISTRY OF TRANSPORTATION ONTARIO DRAWING	September 2023	Rev	1
ENERGY ATTENUATOR, CRASH CUSHION QUADGUARD WIDE SYSTEM INSTALLATION – PERMANENT UNIDIRECTIONAL, TL–2	MTOD 923.186		